Pump System Technology

FILL-RITE

Owner's Operation & Safety Manual

FR702 CABINET PUMPS

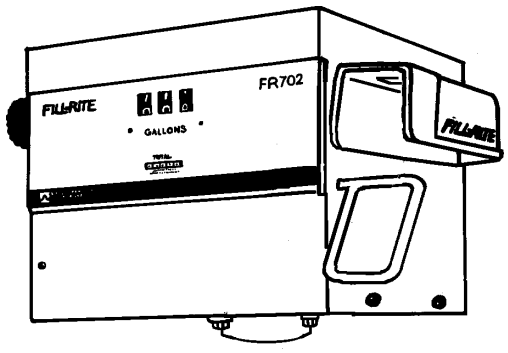

Model FR702R

OUTSTANDING FEATURES

- Up to 18 GPM/68 LPM
- UL listed dispenser & motor
- Full 1/3 HP explosion proof motor
- Meter accuracy of ± 1%

TUTHILL CORPORATION | Transfer Systems Group
8825 Aviation Drive
Fort Wayne, Indiana USA 46809
Tel 219 747-7524 Fax 219 747-3159

Dear Fill-Rite Customer,

Thank you for buying a Fill-Rite product. We believe that you have bought the best. This piece of literature contains information about your new equipment and its operating and service requirements. Please take a few minutes to read it carefully.

Fill-Rite's products are distributed around the world and are the result of people at Fill-Rite working together to design, manufacture, sell, ship and service products which meet the needs of each and every customer.

If, for any reason, any of our products do not meet your performance expectations, we would like to hear from you. Our best sales force is you, our customer, and we want you to be satisfied. We appreciate your purchase of a Fill-Rite product and look forward to providing your future equipment needs.

Sincerely,

George P. Jenkins
President

DANGER

Electrical wiring should be done by a licensed electrician in accordance with NFPA 70. Pump should be properly grounded and a rigid conduit should be used when installing electrical wiring. Improper use or installation of this product can cause serious bodily injury or death.

SAFETY INSTRUCTIONS

To ensure safe and efficient operation, it is essential to read and follow each of these warnings and precautions.

1. To prevent damage to pump, do not operate without the check valve (F2661) or the check valve substitute (F2679) in place. Fluid leakage could result.
2. Do not smoke near pump or use pump near an open flame when pumping flammable fluids. Fire could result.
3. A filter should be used on pump outlet to ensure that no foreign material is transferred to fuel tank.
4. Take motors needing service to an authorized repair shop or return to factory to maintain "explosion proof" integrity.
5. The pump motor is equipped with thermal overload protection. If overheated, it will shut itself off without any damage to the windings. Be sure to turn off the pump power if this occurs. As the motor cools, it will start without warning if power is on.

GENERAL DESCRIPTION

The FR702 compact cabinet pump is based on Fill-Rite's 700B positive displacement, direct drive pump, and Fill-Rite's series 800C nutating disc flow meter which features a flow rate of 5 to 20 GPM or 19 to 76 LPM and is accurate to within ±1%. Depending on product viscosity and nozzle selection, it can deliver up to 18 gallons/68 liters of fluid per minute. This pumping system is UL listed for use with gasoline and diesel fuel.

The U.S. gallon meter has two unit wheels and a tenth wheel which can be reset to zero. It's totalizer has five unit wheels and a tenth wheel. The optional liter meter has three unit wheels which can be reset to zero. It's totalizer has six unit wheels.

OPTIONS

- Automatic nozzles
- Metering in U. S. gallons or liters
- Front outlet
- Red or white cabinet paint
- Pedestals for island installations
- 220 VAC/60 Hz or 220 VAC/50 Hz

Recommended Automatic Nozzles:

Husky 1-GS, 1-A & 1+VIII

OPW 11-A & 7-H

NOTE: Using an automatic nozzle will reduce flow rate.

TECHNICAL INFORMATION

Design Features:

- 2" NPT inlet, 3/4" NPT outlet
- 22 PSI maximum outlet pressure
- Minimum dry vacuum of 10" Hg
- Furnished with 3/4" dia. x 12' hose and manual nozzle
- Cabinet measures 13"W x 11.5"D x 10.5"H
- Built-in check valve, bypass valve and thermal expansion valve
- No additional foot valve or check valve needed to hold prime
- 1/3 HP 115VAC-60Hz, 5.5 amp, 1725 RPM, direct drive motor
- Ball bearing construction: no greasing or oiling required
- Thermal overload protection
- Explosion proof
- Mechanical totalizer to 100,000 units
- ± 1% accuracy
- Unit wheels have large 11/16" figures
- Convenient, large reset knob with positive zero stop
- Not for resale use

Fluid Compatibility

If in doubt about compatibility of a specific fluid, contact supplier of fluid to check for any adverse reactions to the following wetted materials.

Cast Iron	Steel	Fiber
Bronze/Iron	Carbon	Polyester
Aluminum	Fluorocarbon	Buna N
Ryton		Ceramic
300S Stainless Steel	400S Stainless Steel	
Zinc Plated Steel		

SAFETY

The safety of the Fill-Rite FR702 pumping system is proven by the following listings.

This product is listed by Underwriters Laboratories Inc. (UL). Samples of this product have been evaluated by UL and meet the applicable UL Standards for Safety. Also recognized in Canada.

Canadian Standards Association, a Canadian organization for testing of products to ensure public safety.

INSTALLATION

FR702 pumps can be easily mounted on aboveground storage tanks or used with underground storage tanks. Systems should be designed to require a minimum amount of suction lift. Maximum "equivalent feet of lift" is 10' for gasoline and 12' for diesel fuel. ("Equivalent feet of lift" is the vertical distance from the bottom of the suction pipe to the inlet of the pump, plus the friction losses through the vertical and horizontal runs of pipe, elbows and other fittings.)

Tank adapter (F2170) has 2" NPT outer threads and 1" NPT inner threads and is included for use with a 1" suction pipe on an aboveground tank installation. Use larger (2" recommended) suction pipe for underground tank installations.

Pump has a built-in check valve with pressure relief to prevent fluid thermal expansion from causing unsafe system pressures. DO **NOT** USE ADDITIONAL CHECK VALVES OR FOOT VALVES UNLESS THEY HAVE PROPER PRESSURE RELIEF VALVES BUILT INTO THEM.

The FR702 cabinet pump must be installed in accordance with the applicable requirements of the Automotive and Marine Service Station code, NFPA No. 30A, and the National Electrical Code, NFPA No. 70. They are designed for use either inside or outside of buildings subject to the acceptance of inspection authorities having jurisdiction at points of installation.

Mechanical Installation

Use UL classified gasoline and oil resistant pipe compound on all threaded joints. Refer to page 4 for tank and direct mounting installation diagrams.

1. Install suction piping as illustrated in diagram and tighten all joints. Pressure test for leaks before covering tank and line on underground tank installations.

2. Thread pump onto tank adapter (F2170) for aboveground tanks or direct mounting installations.

Electrical Installation

Refer to FR702 pump parts list and drawing.

1. Turn off all power.
2. Remove cabinet top (item 17) to expose 700B pump for electrical hookup. Cabinet can be disassembled by following the steps outlined in "ASSEMBLY/ DISASSEMBLY" section of this manual.
3. Route wiring and rigid conduit through opening at base of cabinet. Pump has 1/2" NPT threaded conduit port.
4 Remove junction box cover (item 32 on 700B pump) to expose pump wires: black (110 VAC), white (neutral), and green (ground) screw. Connect wiring to pump, paying special attention to wire colors.
5. Replace junction box cover and tighten conduit fittings.
6. Turn on power to pump and test for proper operation.
7. Turn off power to pump and continue with reassembly, following the steps outlined in "ASSEMBLY/ DISASSEMBLY" section of this manual.

OPERATING INSTRUCTIONS

To ensure maximum performance, pump must be set up according to "INSTALLATION" section of this manual. On initial start-up, it may be necessary to hold nozzle open a few seconds to allow pump to prime.

1. Reset meter to "0".
2. Insert nozzle in tank.
3. Turn pump on.
4. Begin fueling.

Locking Mechanism

Models with universal nozzle boots:

The nozzle retainer is designed to accept a padlock for locking the nozzle in place when the device is not in use. Padlock not supplied.

Models with standard nozzle boots:

The handle stop is provided with an elongated hole to accept a padlock for locking the nozzle in place when the device is not in use. A padlock with a minimum shackle height of 2" and a maximum height of 3" is required. Padlock is not supplied.

CALIBRATION

The Fill-Rite series 800C meter used inside the FR702 pumping system is calibrated at the factory metering gasoline in either U.S. gallons or liters, depending on the model. Calibration is recommended upon initial use, and required after disassembly, when metering a different fluid or after significant wear.

Meter calibration can be easily changed by following the calibration procedure listed below. A proving container or a container of KNOWN volume will be needed for the calibration procedure. The container's volume should be at least five times larger than the unit of calibration. For example, a five gallon container should be used when calibrating for gallons.

Procedure for Calibration:

1. Fill container to a known volume.

ABOVEGROUND INSTALLATION

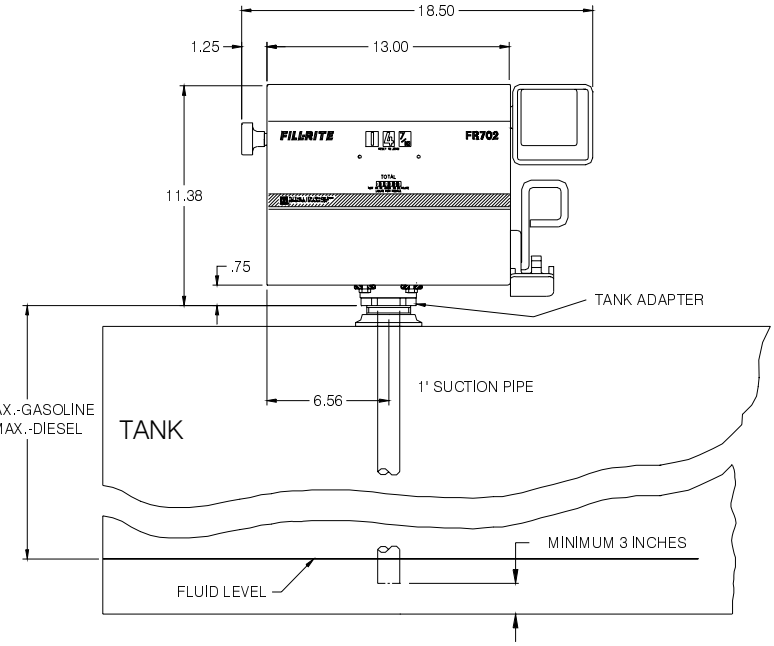

DIRECT MOUNTING INSTALLATION

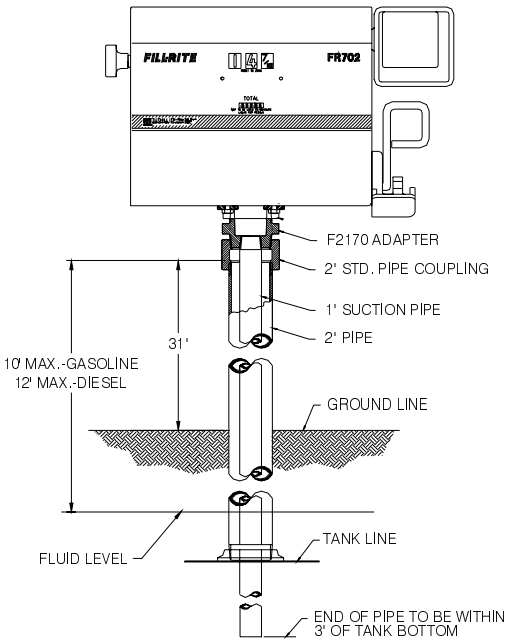

2. If meter amount is incorrect, turn calibration screw (item 21) counterclockwise for less liquid or clockwise for more liquid.
3. Repeat step 2 until calibration is acceptable.

CHECKING EXISTING CALIBRATION

To check meter's existing calibration, a five gallon or a 20 liter proving container is required. Start by allowing a small amount of fluid to flow through pump until all trapped air has been purged. Do NOT include this fluid in the amount metered to check calibration.

Fill container using maximum flow rate until meter registers volume of container. If volume in container and volume on display are not in agreement, try to equalize the volume by following the procedure listed in the "CALIBRATION" section of this manual.

ASSEMBLY/DISASSEMBLY

Remove power to pump before removing cover. Drain liquid from system before loosening any fittings to prevent excessive spillage.

Pump Cabinet (see FR702 cabinet drawing)

Disassembly

1. Remove front plate (item 22) by removing two screws (item 21).
2. Remove faceplate (item 28) by removing two screws (item 27).
3. Pull off reset knob (item 44).
4. Turn switch handle (item 13) to vertical position.
5. Remove six screws (item 41) from cabinet top (item 17).
6. Remove top and set aside to expose pump and meter.

Assembly

1. Replace cabinet top, making sure it slips over the meter and the outside edges of the cabinet base (item 7).
2. Replace screws in cabinet top. Install the two screws in back of cabinet before replacing side screws. Position top squarely before tightening screws.
3. Attach reset knob.
4. Replace front plate and faceplate. Align each before tightening.

Meter (see 800C meter drawing)

Meter can be completely disassembled without disturbing piping, or meter can be partially disassembled as required.

Meter Counter Assembly (item 4)

1. To expose counter assembly, remove two screws (item 13).
2. Reassemble by reversing procedure.

NOTE: Due to complicated assembly methods, individual counter assembly parts are not available. The complete assembly must be replaced if problems occur.

Meter Chamber Assembly (item 26)

1. To expose meter chamber assembly, gear train and seal, remove four bolts (item 20) from back of meter.
2. Reassemble by reversing procedure.

Meter chamber assembly consists of upper and lower chambers and nutating disc. If replacement of any components of the meter chamber assembly is required, the complete assembly must be replaced due to the precise

method of its construction. This assures a proper fit and a correct operating chamber.

Meter Gear Train and Seal

1. Remove cluster gear (item 10) and washer (item 11).
2. Remove drive gear (item 8) and washers (item 7) by rotating and pulling drive gear.
3. Remove O-ring seal (item 6). When reassembling seal, lubricate O-ring with oil or petroleum jelly and replace in cover.
4. To reassemble, place washer on drive gear shaft. Rotate and push shaft through O-ring and cover carefully to prevent damage to O-ring. Shaft must then be guided into pinion bevel (item 28) if counter has not been removed.
5. Replace remaining parts by reversing procedure.

REPAIR

Motors needing repair should be taken to an authorized repair shop or returned to the factory. Pumps must be thoroughly flushed and drained before being taken in for service.

If pump was used for a fluid other than a petroleum product, it must be triple-rinsed and accompanied by an MSDS sheet indicating the chemicals which have been pumped with the unit. Pumps not adhering to these specifications may be refused service at either the repair shop or at the factory.

MAINTENANCE

To keep pump running at its best, remove cabinet cover and periodically perform the following procedures to the 700B pump.

1. Check pump strainer for dirt accumulation. To clean strainer, remove strainer cover (item 23) and pull out screen (item 25).
2. Remove pump rotor cover (item 18) and inspect vanes (item 11) for nicks, burrs or wear. Vane height should be no less than .40" or damage to pump could result.
3. Meter should operate maintenance free. However, certain liquids can dry out while in meter housing, causing meter to stop. If this happens, meter should be thoroughly cleaned (see cleaning instructions below).
4. Check hose (item 34) and nozzle (item 35) for wear or damage. Bad hoses or nozzles are potential safety hazards.

Cleaning instructions:

Run a flushing fluid through meter. For a more thorough cleaning, disassemble meter according to the "ASSEMBLY/DISASSEMBLY" section, "Meter Chamber Assembly" subsection of this manual. Rinse all meter components. Recalibrate meter following calibration instructions.

Cleaning Seal (see 700B pump drawing):

Due to the precise method of this procedure, only attempt to clean seal if all other troubleshooting solutions fail.

To clean seal (item 6):

1. Remove any oil or particulate material from optically flat ceramic and carbon mating surfaces using a lint free cloth and methyl alcohol.
2. Visually check surfaces for damage such as nicks or wear.
3. Replace seal if any damage is noted.

NOTE: Do not allow body oil or any grease to coat mating seal surfaces as these surfaces must be clean and dry to properly seal.

FR702 FLOW CHART

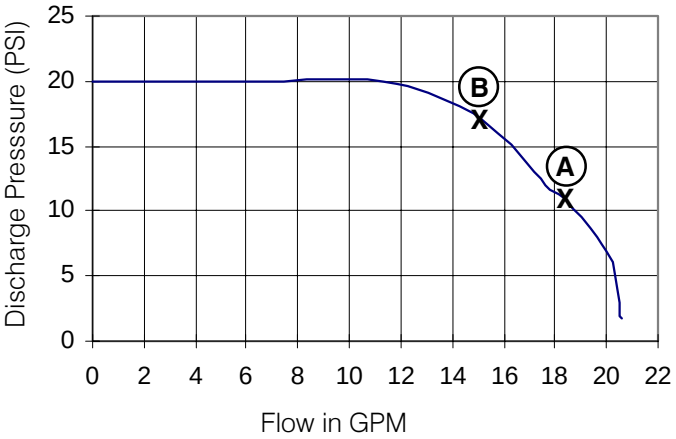

A) FR702 with 12' of 3/4" hose and manual nozzle.
B) FR702 with 12' of 3/4" hose an automatic nozzle.

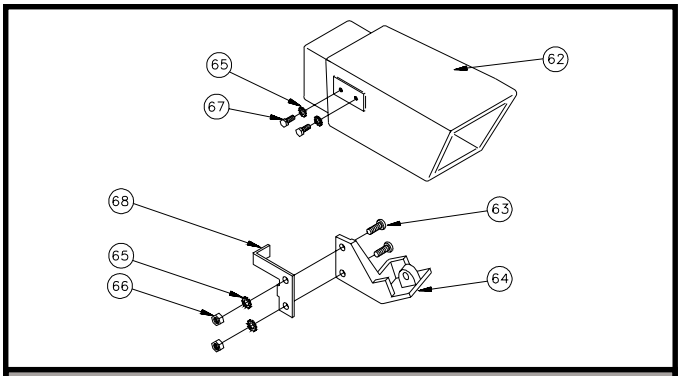

Universal Nozzle Boot Option

62	702 F3489	F3489	Universal Nozzle Boot, Red	1
	702 F3572	F3572	Universal Nozzle Boot, White	Opt.
63	1500-29	F7338	1/4-20 x 3/4 PHMS	2
64	712 F3519	F3519	Nozzle Bracket	1
65	702-19	F3300	1/4 Ext. Lockwasher	4
66	702-20	F3310	1/4-20 Hex Nut	2
67	150-40	F1470	1/4-20 x 1/2 HHCS	2
68	F1104	F1104	Handle Stop	1
	300-41	F7767	1" Manual Nozzle (not shown)	1
	800-133	F4459	1 x 3/4 Bushing (not shown)	1

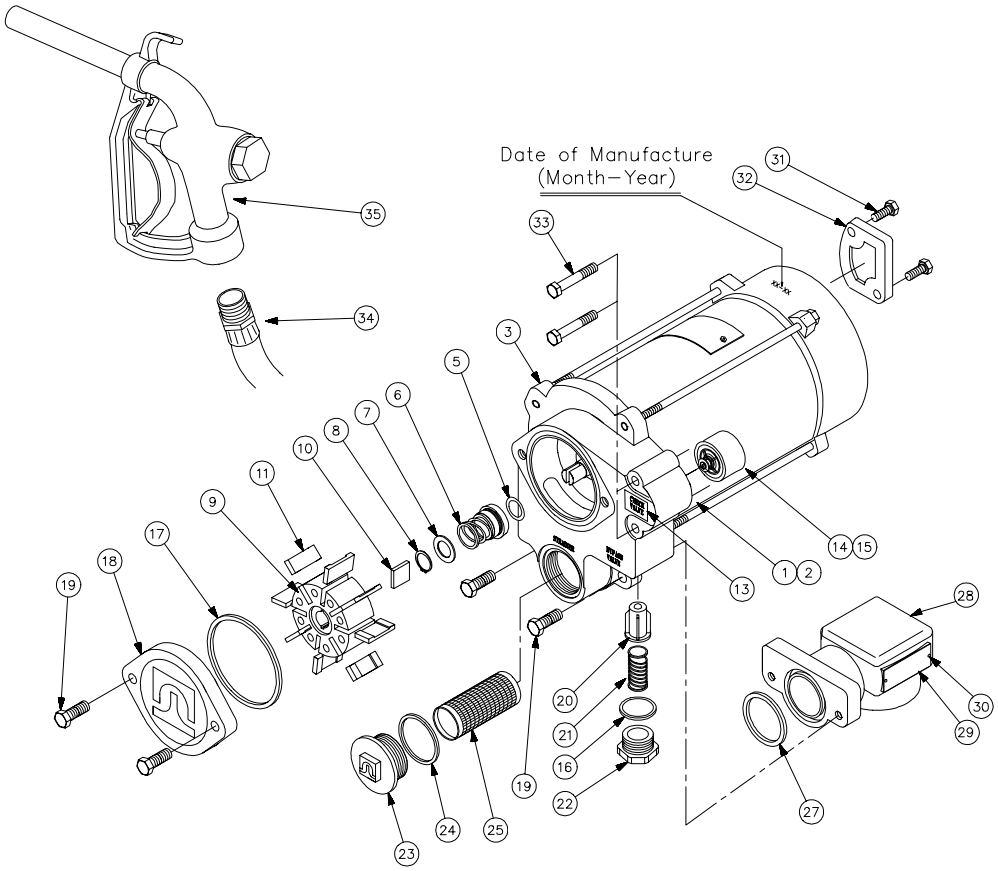

700B PUMP PARTS LIST

ITM. NO.	PART NO.	PROC. NO.	DESCRIPTION	QTY.	ITM. NO.	PART NO.	PROC. NO.	DESCRIPTION	QTY.
1	F2683	F2683	Motor - 115V, 60 Hz	1	18	700-6WF	F8653	Rotor Cover	1
	F3143	F3143	Line Switch (Included w/items 1 & 2)	1	19	704-18	F3700	3/8 - 16 x 1 HHCS	4
					20	700F2762	F2762	Poppet	1
	F3149	F3149	Switch Shaft Assy. (Included w/items 1 & 2)	1	21	F2775	F2775	Bypass Spring	1
					22	1200-11S	F6464	Bypass Cap	1
2	F2697	F2697	Motor - 220V, 50/60 Hz	Opt.	23	800-114	F4360	Strainer Cover	1
3	700F2686	F2686	Pump Housing (Included w/item 2)	1	24	800-115	F4380	O-Ring Gasket (-131)	1
5	700-103	F2754	Fiber Seal Slinger	1	25	700B-7	F2665	Strainer - Standard Mesh	1
6	700-40K	F2687	Seal Assembly (Includes Items 7, 8 & F2005 Seal Tool)	1	27	300-28	F7744	O-Ring Gasket (-224)	1
					28	F2668	F2668	Inlet Housing	1
7	P1-530	F4660	Seal Washer	1	29	----------	----------	Pump Nameplate	1
8	F2688	F2688	Retaining Ring (5100-62)	1	30	G1906	G1906	3/32 Rivet	2
9	700F2654	F2654	Rotor	1	31	600-109	F2220	5/16 - 18 x 3/4 HHCS	4
10	700-53	F3131	Rotor Key	1	32	700F3015	F3015	Junction Box Cover	1
11	700F2716 -X150	F2716	Vane - Carbon Machined	8	33	304-62	F7717	5/16-18 x 2 1/4 HHCS	2
					34	700-56	F3135	12' UL Listed Hose	1
13	700F2680	F2680	Check Valve Label	1	35	700-57	F3136	3/4" No-lead Nozzle	1
14	700F2661	F2661	Check Valve Assy.	1		F2659	F2659	700B Repair Parts Kit (Includes Items 9, 10, 11, 16, 17, 20, 24, 27, F2800 O-Ring Gasket & F2687 Seal Kit)	Opt.
15	F2679	F2679	Dummy Check Valve	Opt.					
16	1200-12	F6455	O-Ring Gasket (-121)	1					
17	300-27	F7743	O-Ring Gasket (-236)	1					

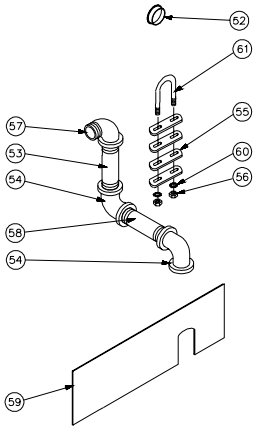

Front Discharge Option

52	604-30	F2600	Grommet	1
53	702-23-4	F3360	3/4 x 3-1/2 Nipple	1
54	702-24	F3390	3/4 Elbow	2
55	604-31-2	F2620	Spacer	1-4
56	702-20	F3310	1/4-20 Hex Nut	2
57	702-25	F3400	3/4 Street El	1
58	702-25-5C	F3366	3/4 x 4 Nipple	1
59	702-358	F3558	Front Plate, Red	1
	702F3607	F3607	Front Plate, White	Opt.
60	702-19	F3300	1/4 Ext. Lockwasher	2
61	604-31-1	F2610	U-Bolt	1
	702F3583	F3583	1-1/2 Hole Plug (Not Shown)	1

FR702 PUMP PARTS LIST

ITM. NO.	PART NO.	PROC. NO.	DESCRIPTION	QTY.
1	702F3265	F3265	Pumping Unit, 115 VAC, 60 Hz	1
	F3274	F3274	Pumping Unit, 220 VAC, 50/60 Hz	Opt.
3	604-8	F2450	Mounting Grommet	8
4	604-9	F2460	Cup Washer	8
5	704-12	F3640	5/16-18 x 1-1/4 HHCS	4
6	702F1027	F1027	Switch Rod	1
7	F1007A	F1061	Cabinet Base Assembly, Red	1
	F1063	F1063	Cabinet Base Assembly, White	Opt.
8	600-109	F2220	5/16-18 x 3/4 HHCS	2
9	702-19	F3300	1/4 Ext. Washer	3
10	702-20	F3310	1/4-20 Hex Nut	3
11	704-17	F3690	5/16 Split Washer	2
12	F1031	F1031	Switch Lever	1
13	F1149	F1149	Switch Handle Assembly	1
14	702-23-1	F3340	3/4" Close Nipple	1
15	F6688	F6688	Standard Nozzle Boot, Red	1
	F6689	F6689	Standard Nozzle Boot, White	Opt.
16	704-16	F3680	5/16-18 Hex Nut	2
17	F1012A	F1012	Cabinet Top, Red	1
	F1064	F1064	Cabinet Top, White	Opt.
18	F3579	F3579	Hitch Pin	1
20	702-28	F3430	10-24 Type 'U' Nut	2
21	100-17	F0830	10-24 x 3/8 PHMS	2
22	F1029A	F1107	Front Plate, Red	1
	F1108	F1108	Front Plate, White	Opt.
23	702-14	F3250	Reset Coupling	1
24	702-29	F3440	10-32 x 1/4 Set Screw	2
25	800G1132	G1132	Meter - U.S. Gallons	1
26	800G2137	G2137	Meter - Liters	Opt.
27	800-66	F4020	4-40 x 1/4 PHMS	2
28	702F3547	F3547	Faceplate - U.S. Gallons - White	1
	702F3566	F3566	Faceplate - U.S. Gallons - Black	Opt.
	702F3603	F3603	Faceplate - Liter - White	Opt.
	702F3604	F3604	Faceplate - Liter - Black	Opt.
35	600-105	F2170	2" Bung Adapter	1
36	F1103	F1103	Handle Stop	1
37	702-24	F3390	3/4 Elbow	1
38	702F3564	F3564	3/4 x 9 Nipple	1
39	604-31-1	F2610	U' Bolt	1
40	604-30	F2600	Grommet	1
41	F8643	F8643	1/4-20 x 1/2 PHMS	7
42	702F3555	F3555	1/4-20 Type 'U' Nut	6
43	702-15	F3260	Reset Shaft	1
44	800-105A	F4261	Reset Knob	1
45	F6684	F6684	Pop Rivet	2
46	704-33	F3811	1/4 Flat Washer	4
48	F3582	F3582	Hole Plug	2
49	700-27	F2950	5/16-18 Locknut	1
50	702-25	F3400	3/4 Street El	1
51	604-31-2	F2620	Spacer	2

800C METER PARTS LIST

ITM. NO.	PART NO.	PROC. NO.	DESCRIPTION	QTY.
4	800-85	F4080	Counter - U.S. Gallon	1
	800-85L	F4081	Counter - Liter	Opt.
5	800G2246	G2246	Meter Cover	1
6	800-97V	F4191	O-Ring (5-106), Fluorocarbon	1
7	800-55	F3980	Washer	2
8	800-160A	F3845	Drive Gear (70T) - U.S. Gallon	1
	800-162A	F3846	Drive Gear (84T) - Liter	Opt.
9	800-16	F3820	Shaft, Cluster Gear	1
10	800-159	F3841	Cluster Gear (22T/67T) - U.S. Gallon	1
	800-161	F3843	Cluster Gear (10T/67T) - Liter	Opt.
11	800-18	F3830	Washer	1
12	800G2250	G2250	Gear Frame Assembly	1
13	F4007	F4007	#8-32 x 5/16 PHMS ACR II	2
18	700-15	F2800	O-Ring (-218), Buna-N	1
19	800G2236	G2236	3/4 Inlet - 3/4 Outlet Housing	1
20	700-16	F2810	5/16-18 x 7/8 HHCS	4
21	800-146A	F4463	Calibration Screw	1
22	800-125V	F4449	O-Ring (-012), Fluorocarbon	1
23	800-124	F4440	Seal Screw	1
24	800-68V	F4036	O-Ring (-008), Fluorocarbon (Included with Item 21)	1
25	800-65	F4010	O-Ring (-156), Buna-N	1
26	800G2262	G2262	Meter Chamber Assembly	1
28	800-172	F3959	Pinion Bevel	1
30	800G2532	G2532	Cover Assembly - U.S. Gallon	1
	800G2535	G2535	Cover Assembly - Liter	Opt.

WHEN ORDERING REPAIR PARTS, BE SURE TO GIVE REPLACEMENT PART NUMBER, DATE OF MANUFACTURE AND PUMP OR METER SERIES NUMBER. THIS WILL ENSURE THAT THE CORRECT REPLACEMENT PART IS SUPPLIED.

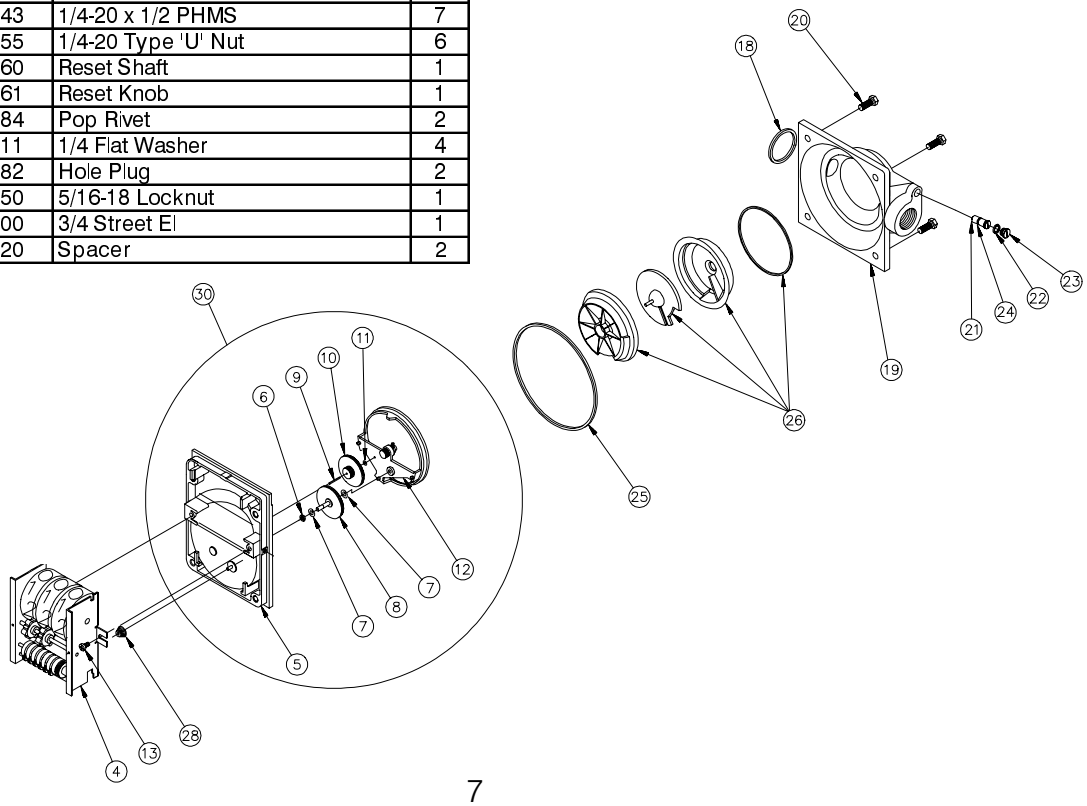

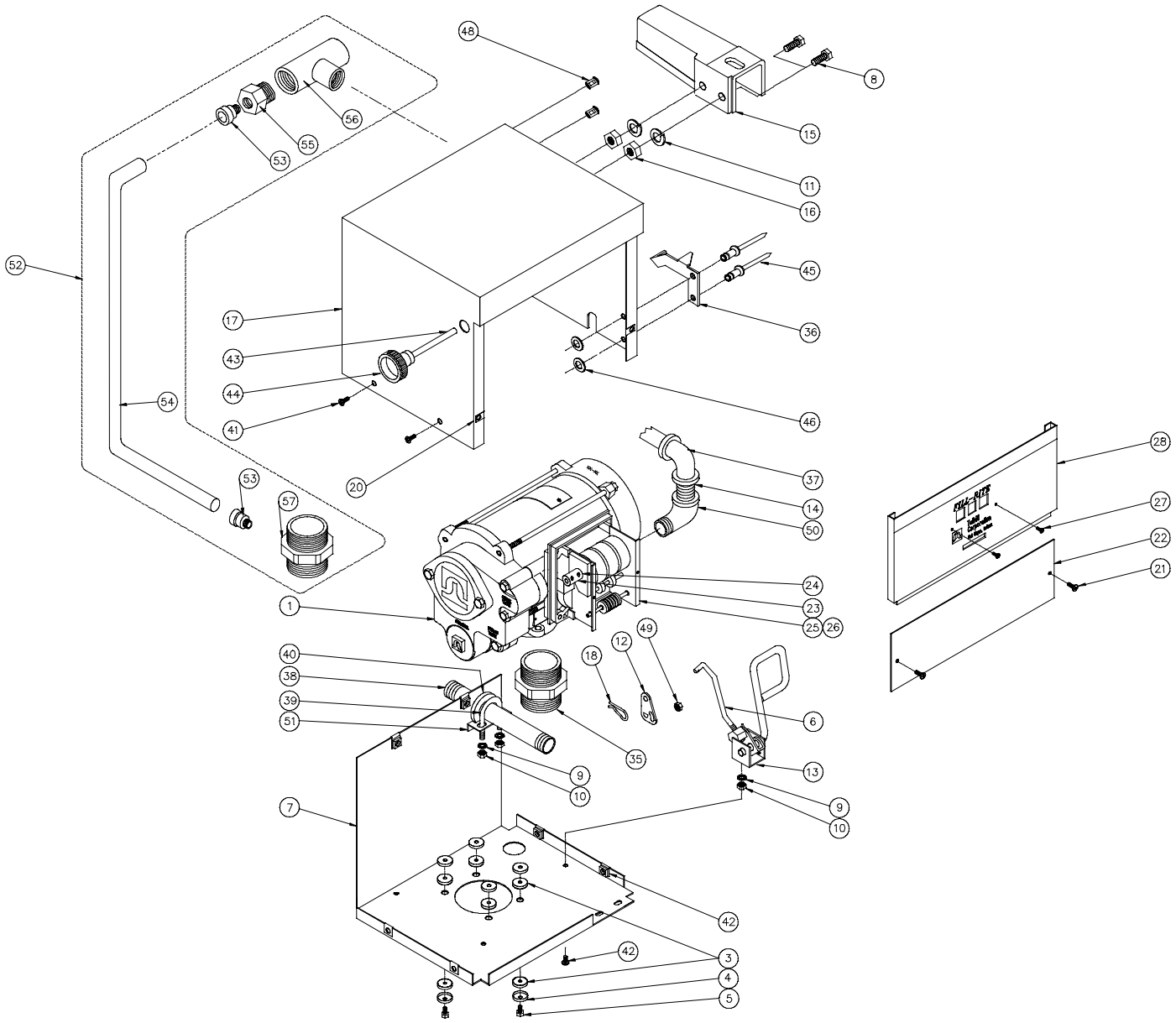

ANTI-SIPHON KIT F0065 (Item 52)			
ITM. NO.	PART NO.	DESCRIPTION	QTY.
53	*	1/4" Compression Fitting	2
54	*	1/4" Tubing	1
55	F1882	Siphon Break	1
56	*	3/4" Tee	1
57	F0651	2" Bung Adapter w/Hole	1

* Part required but not included in kit.

FR702 FILTER KITS

	Side View	Top View (less pump)	Parts List
FR702	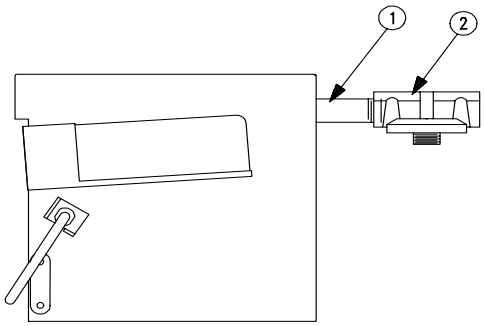	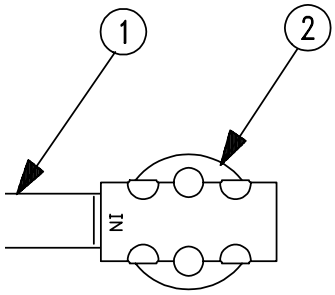	**F7031 Filter Kit (Particulate)** 1. *F3564 3/4 X 9 Nipple 2. F7016 Filter Head F7013 Particulate Pump Filter **F7032 Filter Kit (Hydrosorb)** 1. *F3564 3/4 X 9 Nipple 2. F7016 Filter Head F7012 Hydrosorb Pump Filter

TROUBLESHOOTING GUIDE

PROBLEM	POSSIBLE CAUSE	SOLUTION
Pump will not prime	• Suction line problem • Bypass valve open • Vanes sticking • Gasket leakage • Excessive rotor or vane wear • Outlet is blocked • Motor failure	• Check for leaks in suction line. • Remove and inspect bypass valve. • Check vanes and slots for nicks, burrs or wear. • Tighten covers and joints. • Check rotor and vanes for excessive wear or damage. • Check pump outlet, hose and nozzle for blockage. • Rotor should turn clockwise at pump end; if not, return for repair.
Pump hums but will not operate	• Dirt in pump cavity • Motor failure	• Clean out pump cavity. • Motor bearing(s) frozen; return for repair.
Low capacity	• Excessive dirt in strainer • Suction line problem • Bypass valve sticking • Vanes sticking • Excessive rotor or vane wear • Clogged meter chamber • Hose or nozzle damaged	• Remove and clean strainer. • Check for leaks in suction line. • Remove and inspect bypass valve. • Check vanes and slots for wear. • Check rotor and vanes for excessive wear or damage. • Clean meter chamber. • Replace hose or nozzle.
Pump runs slowly	• Incorrect voltage • Motor failure	• Check incoming line voltage. • Motor bearing(s) failing; return for repair.
Motor stalls	• Bypass valve sticking • Low voltage • Excessive rotor or vane wear	• Remove and inspect bypass valve. • Check incoming line voltage. • Check rotor and vanes for excessive wear or damage.
Motor overheats	• Pumping high viscosity fluids • Clogged strainer • Restricted suction pipe • Motor failure	• These fluids can only be pumped for short periods of time. • Remove and clean strainer. • Remove and clean pipe. • Bearing(s) tightening up; return for repair.
Motor will not turn on	• No power • Switch linkage misaligned • Motor failure	• Check incoming power source. • Adjust switch linkage. • Return for repair.
Fluid leakage	• Bad O-ring • Check valve not seated • Dirty seal • Bad seal	• Check all O-ring gaskets. • Make sure check valve or check valve alternate is in place. • Clean and reseat seal (see "MAINTENANCE" section of this manual). • Replace seal.
Counter reading high or low	• Calibration off • Air in product • Measuring chamber or gears sticking	• Recalibrate meter. • Find and repair air leaks in system. • Clean or replace internal metering components.
Meter shaft seal leakage	• Dirty seal • Bad seal	• Clean O-ring seal and seat area. • Replace seal.
Meter gasket leakage	• Loose joints • Dirty gasket • Bad gasket	• Tighten joints. • Clean gasket and seat area. • Replace gasket.

Fill-Rite: A Worldwide Reputation for Reliability.

For over 40 years, people all over the world who have needed tough, dependable pumps have insisted on Fill-Rite products. For them, Fill-Rite has been “the reliable red pump” that keeps on working even under the toughest of conditions. We’re proud of the reputation our hand pumps, DC and AC pumps and meters have earned. Today they’re only a part of the rapidly expanding Fill-Rite line.

Applying the Science of Fluid Transfer.

An active research and development program is the centerpiece of our ongoing commitment to respond to new fluid transfer opportunities. This has led to new products and to new technologies and new facilities to produce these products.

To bring this advanced technology to market, we have invested in precision engineering and testing equipment. This improves our ability to produce fluid handling equipment that meets market demands for quality, performance and price.

A Hard Working Support Network.

Just as important as these capabilities are the people behind them - our design and production personnel. They give you the ability to specify systems that meet the most challenging of applications. With them, you can be assured of prompt, intelligent answers to your fluid transfer questions.

To service customers in the field, we’ve put together a select, well-monitored team of distributors. Throughout the world, they are ready to help you with technical advice, ordering and delivery.

Fill-Rite will always stand for reliable red pumps and fluid handling equipment. We’ll continue to develop new products and production techniques to keep pace with ever changing technologies. Each of our products will always be made with the same care and quality that made our pumps famous.

PRODUCT WARRANTY

Fill-Rite Division of Tuthill Corporation ("Manufacturer") warrants to each buyer of its products (the "Buyer") for a period of 12 months from date of installation but in no event more than 18 months from date of manufacture that goods of its manufacture ("Goods") will be free from defects of material and workmanship. Specific to Series 10, 12, 20, and 22, Warranty is understood not to exceed 6 months and is specific to all related items. Manufacturer’s sole obligation under the foregoing warranties will be limited to either, at Manufacturer’s option, replacing or repairing defective Goods (subject to limitations hereinafter provided) or refunding the purchase price for such Goods theretofore paid by the Buyer, and Buyer’s exclusive remedy for breach of any such warranties will be enforcement of such obligations of Manufacturer. If Manufacturer so requests the return of the Goods, the Goods will be redelivered to Manufacturer in accordance with Manufacturer’s instructions F.O.B. Factory. IN NO EVENT SHALL MANUFACTURER BE LIABLE FOR CONSEQUENTIAL DAMAGES, NOR SHALL MANUFACTURER’S LIABILITY ON ANY CLAIM FOR DAMAGES ARISING OUT OF THE MANUFACTURE, SALE, DELIVERY OR USE OF THE GOODS EXCEED THE PURCHASE PRICE OF THE GOODS.

The foregoing warranties will not extend to Goods subjected to misuse, neglect, accident or improper installation or maintenance, or which have been altered or repaired by anyone other than Manufacturer or its authorized representative. THE FOREGOING WARRANTIES ARE EXCLUSIVE AND IN LIEU OF ALL OTHER WARRANTIES OF MERCHANTABILITY, FITNESS FOR PURPOSE AND OF ANY OTHER TYPE, WHETHER EXPRESS OR IMPLIED.

No person may vary the foregoing warranties and remedies except in writing signed by a duly authorized officer of Manufacturer. Warranties or remedies that differ from the foregoing shall not otherwise be binding on Manufacturer. The Buyer’s acceptance of delivery of the Goods constitutes acceptance of the foregoing warranties and remedies, and all conditions and limitations thereof.

FILL-RITE

TUTHILL CORPORATION | Transfer Systems Group

8825 Aviation Drive
Fort Wayne, Indiana USA 46809
Tel 219 747-7524 Fax 219 747-3159